MITSUBISHI HEAVY INDUSTRIES

HVO

MITSUBISHI MARINE ENGINE

S16R-T2MPTK (Package)

1250–1610 kW | Marine Propulsion

IMO-T2

Reliable mechanical engine

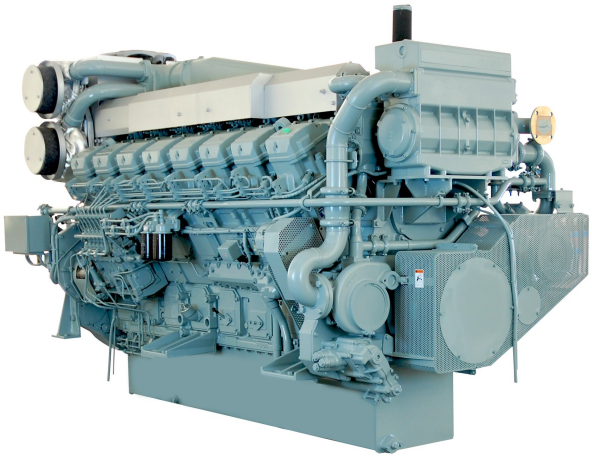

ENGINE DATA			
Engine model	S16R-T2MPTK (Package)	**Method of operation**	16-cylinder, 4-stroke, water-cooled diesel engine, with direct-injection, turbocharger, air-cooler, built-up heat exchanger and sea water pump
Cylinder configuration	16/60°V		
Bore × stroke (mm)	170 x 180		
Total displacement (l)	65.4		
Compression ratio	14.5:1	**Cooling method**	separate high and low temperature cooling circuit; charge air cooler directly cooled by sea water (intercooler)
Flywheel and housing	SAE 21 / SAE 00		
Dry weight (kg)	7000		
Aspiration	Turbocharged and after-cooled		

RATING [1,2]			
Duty Class	UCD	HD	MD
Output (kW)	1250	1380	1610
Output (bhp)	1675	1850	2158
Engine speed (rpm)	1600	1650	1800
Average fuel consumption (l/h)[3]	207.3	229.5	271.7
Running Hours	7000 - unlimited	5000-7000	3000 - 5000
Propulsion System	CPP/FPP	CPP/FPP	CPP/FPP
Emissions	IMO-T2		

1 For rating definitions, please see our website.

2 Atmospheric condition: barometric pressure: 100 kPa, ambient temperature: 298 K, relative humidity: 30%.

3 Fuel consumption is based on ISO3046/1 with +5% tolerance at rated power, weighing 836 g/liter and a LHV of 42,780 kJ/kg, excluding pump. Average fuel consumption recommended by ISO8178 (E3 standard test cycle for propulsion application FPP).

© Mitsubishi Turbocharger and Engine Europe B.V.
This specification may be revised without prior notice.
All pictures shown are for illustration purpose only.
Version: 22-10-2026

STANDARD EQUIPMENT

GOVERNOR (MANDATORY)
- Hydraulic governor, woodward type PSG

FUEL SYSTEM
- Flexible fuel supply - and return hoses
- Fuel feed pump
- Fuel fine filters, change-over type
- Fuel injection pump
- Dual walled high-pressure fuel lines
- Fuel injectors
- Fuel oil / water separator (filter)

LUBRICATING OIL SYSTEM
- Wet type oil pan with inspection covers
- Oil pressure pump, gear driven
- Lubricating oil filters, change-over type
- By-pass filter
- Oil cooler with thermostat
- Lubricating oil drain pump (wing pump)
- Piston cooling through oil injectors
- Oil drain connection

STARTING AND ELECTRICAL SYSTEM
- Electric starter (Earth floated 24V)
- Alternator, 30 Amps.
- Stop solenoid (ETS)
- Battery switch

COOLING SYSTEM
- Sea water filter
- Heat exchanger / header tank, mounted on engine, including piping and level switch and seawater pump (TK)
- Flexible pipe sets for seawater

AIR INLET SYSTEM
- Mitsubishi turbocharger
- Air inlet silencer with pre-cleaner
- Inlet air aftercooler or intercooler
- Inlet manifolds or ducts

EXHAUST SYSTEM
- Flexible expansion joint

OTHER
- Mounting brackets for rigid mounting
- Flywheel and housing, SAE standard
- Torsional vibration damper

OPTIONAL EQUIPMENT

CERTIFICATION / CLASSIFICATION
- Available in cooperation with major classification societies.

MONITORING SYSTEM
- Monitoring system (incl. sensors on engine, wiring to junction box, 1 x engine room panel, 1 wheel house panel)

DIMENSIONS

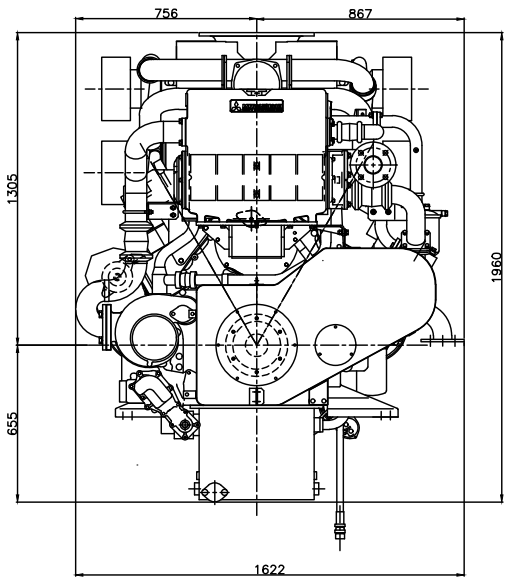

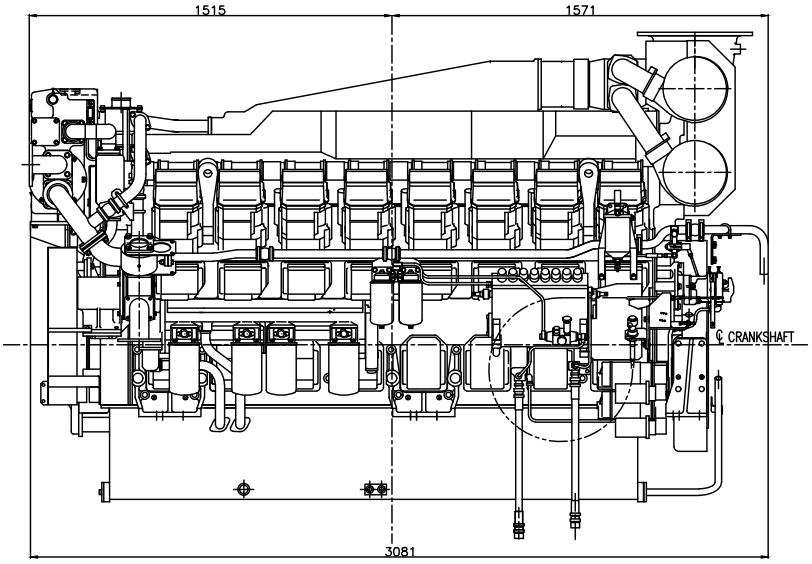

More information

Contact your local dealer for more information regarding Mitsubishi Marine Engines and optional equipment or, visit **www.mtee.eu**

© Mitsubishi Turbocharger and Engine Europe B.V.
This specification may be revised without prior notice.
All pictures shown are for illustration purpose only.
Version: 22-10-2026

MOVE THE WORLD FORWARD MITSUBISHI HEAVY INDUSTRIES GROUP