MITSUBISHI HEAVY INDUSTRIES

HVO

MITSUBISHI MARINE ENGINE

S12A2-MPTAW

701–776 kW | Marine Propulsion
IMO-T2, IMO-T3 (SCR option)*
and EU-5 (SCR option)*

Reliable mechanical engine

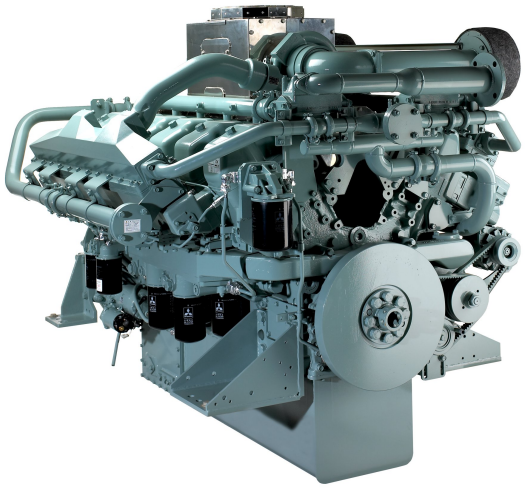

ENGINE DATA			
Engine model	S12A2-MPTAW	**Method of operation**	12-cylinder, 4-stroke, water-cooled diesel engine, with direct-injection, turbocharger and air-cooler
Cylinder configuration	12/60°V		
Bore × stroke (mm)	150 x 160		
Total displacement (l)	33.93		
Compression ratio	15.3:1	**Cooling method**	separate high and low temperature cooling circuit; charge air cooler by closed freshwater system controlled by thermostat (intercooler)
Flywheel and housing	SAE 18 / SAE 00		
Dry weight (kg)	3380		
Aspiration	Turbocharged and after-cooled		

RATING [1,2]		
Duty Class	UCD	HD
Output (kW)	701	776
Output (bhp)	940	1040
Engine speed (rpm)	1940	2000
Gross torque (Nm)	3451	3705
Fuel consumption 100% load (g/kWh)[3]	217	222
Fuel consumption 75% load (g/kWh)[3]	208	212
Fuel consumption 50% load (g/kWh)[3]	206	207
Average fuel consumption (l/h)[3]	119	131.5
Running Hours	7000 - unlimited	5000-7000
Propulsion System	CPP/FPP	CPP/FPP
Emissions	IMO-T2, IMO-T3 (SCR option)* and EU-5 (SCR option)*	

1 For rating definitions, please see our website.
2 Atmospheric condition: barometric pressure: 100 kPa, ambient temperature: 298 K, relative humidity: 30%.
3 Fuel consumption is based on ISO3046/1 with +5% tolerance at rated power, weighing 836 g/liter and a LHV of 42,780 kJ/kg, excluding pump. Average fuel consumption recommended by ISO8178 (E3 standard test cycle for propulsion application FPP).
* The SCR after treatment can be provided through our partners. Please contact MTEE for more information.

© Mitsubishi Turbocharger and Engine Europe B.V.
This specification may be revised without prior notice.
All pictures shown are for illustration purpose only.
Version: 14-10-2026

MOVE THE WORLD FORWARD MITSUBISHI HEAVY INDUSTRIES GROUP

STANDARD EQUIPMENT

FUEL SYSTEM
- Flexible fuel supply - and return hoses
- Fuel feed pump
- Fuel fine filters, change-over type
- Fuel injection pump
- Dual walled high-pressure fuel lines
- Fuel injectors

LUBRICATING OIL SYSTEM
- Wet type oil pan with inspection covers
- Oil pressure pump, gear driven
- Lubricating oil filters, change-over type
- By-pass filter
- Oil cooler with thermostat

STARTING AND ELECTRICAL SYSTEM
- Electric starter (Earth floated 24V)
- Alternator, 30 Amps.
- Stop solenoid (ETS)

COOLING SYSTEM
- Fresh water pump including piping and thermostat (HT)
- Front pulley PTO standard
- Cooling water pipe on thermostat housing (HT)

AIR INLET SYSTEM
- Mitsubishi turbocharger
- Air inlet silencer with pre-cleaner
- Inlet air aftercooler or intercooler
- Inlet manifolds or ducts

EXHAUST SYSTEM
- Stainless steel insulation (SOLAS)

OTHER
- Mounting brackets for rigid mounting
- Flywheel and housing, SAE standard
- Torsional vibration damper

OPTIONAL EQUIPMENT

SCR Aftertreatment
For more details, please see page 3

DIMENSIONS

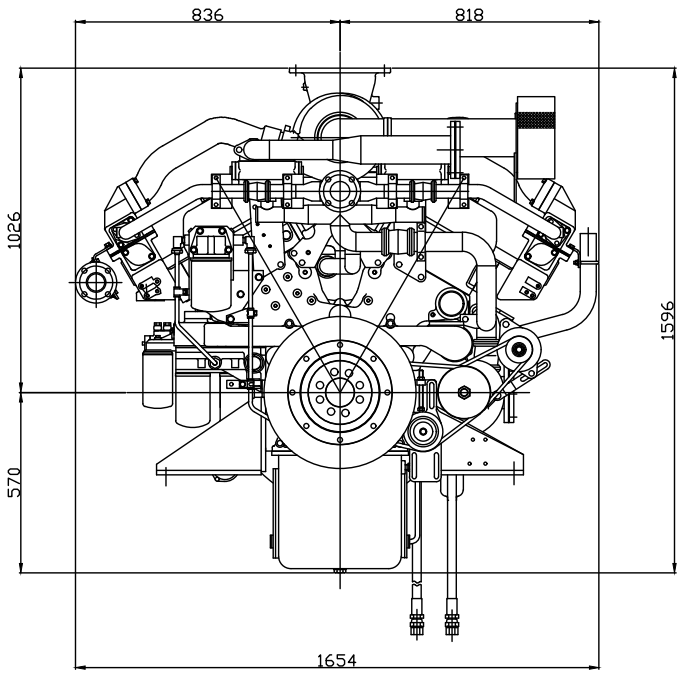

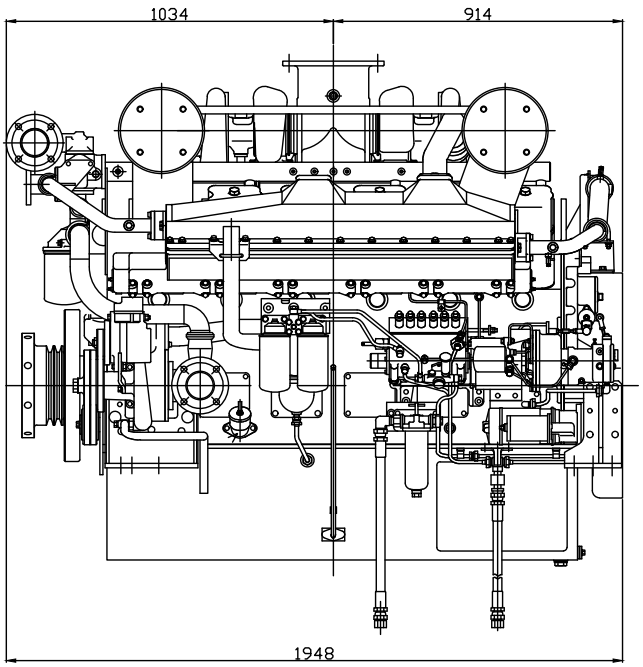

More information

Contact your local dealer for more information regarding Mitsubishi Marine Engines and optional equipment or, visit **www.mtee.eu**

© Mitsubishi Turbocharger and Engine Europe B.V.
This specification may be revised without prior notice.
All pictures shown are for illustration purpose only.
Version: 14-10-2026

MOVE THE WORLD FORWARD MITSUBISHI HEAVY INDUSTRIES GROUP

OPTIONAL EQUIPMENT

CERTIFICATION / CLASSIFICATION
- Available in cooperation with major classification societies.

GOVERNOR (MANDATORY)
- Hydraulic governor
- Electronic governor (not available for single engine propulsion)
- Electronic governor, with speed control box

FUEL SYSTEM
- Drip tray fuel filters

LUBRICATING OIL SYSTEM
- Drip tray oil filters
- Lubricating oil drain pump
- Pre-lubrication oil system

MONITORING SYSTEM
- Complete digital monitoring system
- Sensor package; sensors mounted on engine with terminal box

STARTING AND ELECTRICAL SYSTEM
- Air starter motor (30 bar)

COOLING SYSTEM
- Cooling system with fresh water pump, V-belt including piping and thermostat (LT)
- Cooling water heater with circulation pump

EXHAUST SYSTEM
- Flexible expansion joint

SCR AFTER TREATMENT SYSTEM

- SCR reactor
- Injection unit
- Dosing unit
- Shoot blower system
- Control system
- Urea pump unit

DIMENSIONS

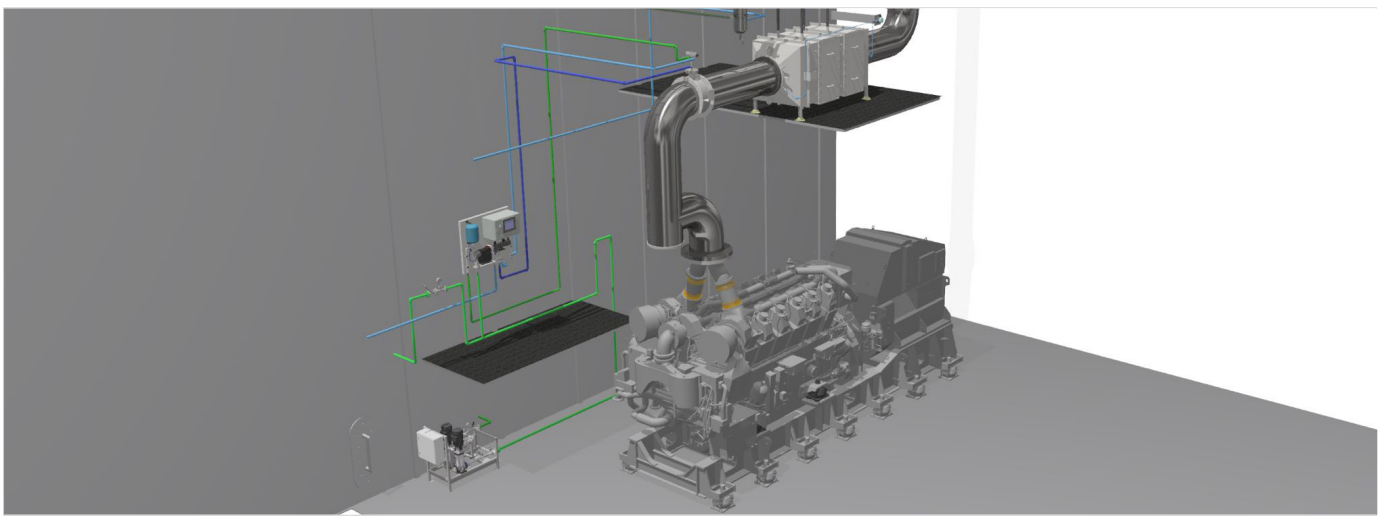

Dimensions

Engine L x W x H (mm)	1948 x 1654 x 1596
SCR unit (SCR25) size (excl. insulation) L x W x H (mm)	893 x 882 x 2349
Mixing pipe requirements diameter (DN)*	400
Mixing pipe length (mm)*	2500

* Insulation of the SCR system is not included in the scope of supply, to be supplied and installed by the shipyard.

More information

Contact your local dealer for more information regarding Mitsubishi Marine Engines and optional equipment or, visit **www.mtee.eu**

© Mitsubishi Turbocharger and Engine Europe B.V.
This specification may be revised without prior notice.
All pictures shown are for illustration purpose only.
Version: 14-10-2026