MITSUBISHI HEAVY INDUSTRIES

HVO

MITSUBISHI MARINE ENGINE

S12R-MPTA

1110–1190 kW | Marine Generator

Not Regulated

Reliable mechanical engine

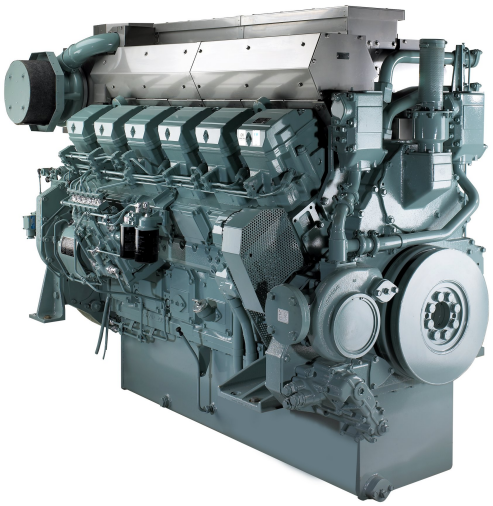

ENGINE DATA			
Engine model	S12R-MPTA	**Method of operation**	12-cylinder, 4-stroke, water-cooled diesel engine, with direct-injection, turbocharger and air-cooler
Cylinder configuration	12/60°V		
Bore × stroke (mm)	170 x 180		
Total displacement (l)	49.03		
Compression ratio	14.0:1	**Cooling method**	single cooling circuit; charge air cooler integrated in jacket water system (aftercooler)
Flywheel and housing	SAE 21 / SAE 00		
Dry weight (kg)	5230		
Aspiration	Turbocharged and after-cooled		

RATING [1,2]		
Application	Generator	
Duty Class	Prime	Prime
Output (kW)	1110	1190
Output (bhp)	1488	1595
Engine speed (rpm)	1500	1800
Gross torque (Nm)	7210	6440
Fuel consumption 100% load (g/kWh)[3]	207	214
Fuel consumption 75% load (g/kWh)[3]	212	220
Fuel consumption 50% load (g/kWh)[3]	218	232
Average fuel consumption (l/h)[3]	136.6	155.2
Emissions	Not Regulated	

1 For rating definitions, please see our website.

2 Atmospheric condition: barometric pressure: 100 kPa, ambient temperature: 298 K, relative humidity: 30%.

3 Fuel consumption is based on ISO3046/1 with +5% tolerance at rated power, weighing 836 g/liter and a LHV of 42,780 kJ/kg, excluding pump. Average fuel consumption recommended by ISO8178 (E3 standard test cycle for propulsion application FPP).

© Mitsubishi Turbocharger and Engine Europe B.V.
This specification may be revised without prior notice.
All pictures shown are for illustration purpose only.
Version: 14-10-2026

MOVE THE WORLD FORWARD MITSUBISHI HEAVY INDUSTRIES GROUP

STANDARD EQUIPMENT

FUEL SYSTEM
- Flexible fuel supply - and return hoses
- Fuel feed pump
- Fuel fine filters, change-over type
- Fuel injection pump
- Dual walled high-pressure fuel lines
- Fuel injectors

LUBRICATING OIL SYSTEM
- Wet type oil pan with inspection covers
- Oil pressure pump, gear driven
- Lubricating oil filters, change-over type
- By-pass filter
- Oil cooler with thermostat

STARTING AND ELECTRICAL SYSTEM
- Electric starter (Earth floated 24V)
- Alternator, 30 Amps.
- Stop solenoid (ETS)

COOLING SYSTEM
- Fresh water pump including piping and thermostat (HT)
- Front pulley PTO standard
- Cooling water pipe on thermostat housing (HT)

AIR INLET SYSTEM
- Mitsubishi turbocharger
- Air inlet silencer with pre-cleaner
- Inlet air aftercooler or intercooler
- Inlet manifolds or ducts

EXHAUST SYSTEM
- Stainless steel insulation (SOLAS)

OTHER
- Mounting brackets for rigid mounting
- Flywheel and housing, SAE standard
- Torsional vibration damper

OPTIONAL EQUIPMENT

CERTIFICATION / CLASSIFICATION
- Available in cooperation with major classification societies.

GOVERNOR (MANDATORY)
- Hydraulic governor
- Electronic governor, with speed control box

FUEL SYSTEM
- Drip tray fuel filters

LUBRICATING OIL SYSTEM
- Drip tray oil filters
- Pre-lubrication oil system

MONITORING SYSTEM
- Complete digital monitoring system
- Sensor package; sensors mounted on engine with terminal box

STARTING AND ELECTRICAL SYSTEM
- Air starter motor (30 bar)

COOLING SYSTEM
- Cooling system with fresh water pump, V-belt including piping and thermostat (LT)
- Cooling water heater with circulation pump
- Big capacity front PTO

EXHAUST SYSTEM
- Flexible expansion joint
- Horizontal exhaust instead of vertical

DIMENSIONS

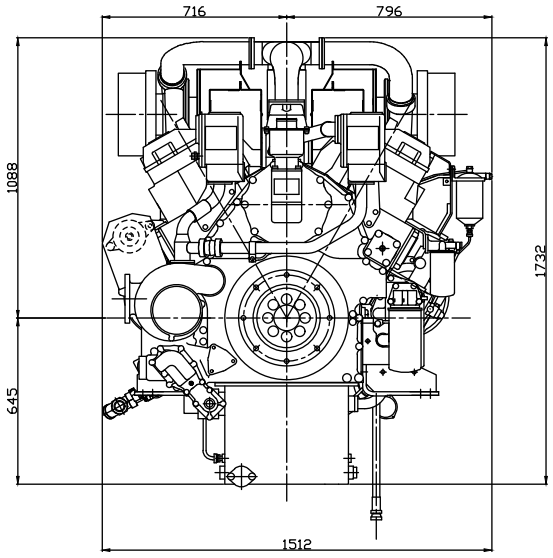

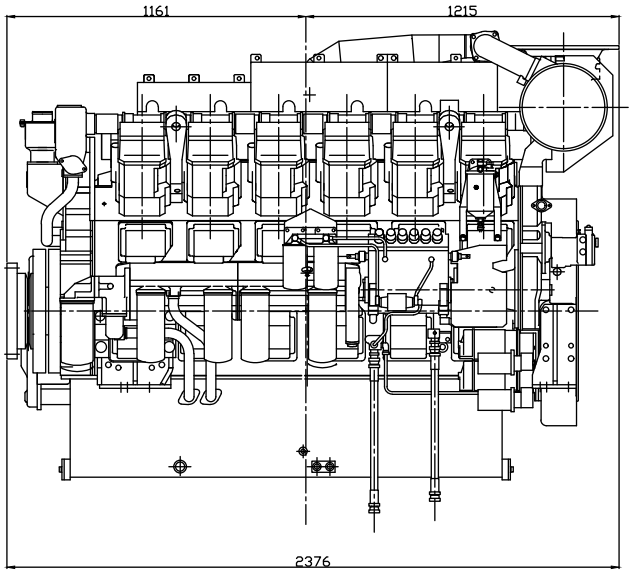

More information

Contact your local dealer for more information regarding Mitsubishi Marine Engines and optional equipment or, visit **www.mtee.eu**

© Mitsubishi Turbocharger and Engine Europe B.V.
This specification may be revised without prior notice.
All pictures shown are for illustration purpose only.
Version: 14-10-2026

MOVE THE WORLD FORWARD MITSUBISHI HEAVY INDUSTRIES GROUP