MITSUBISHI HEAVY INDUSTRIES

HVO

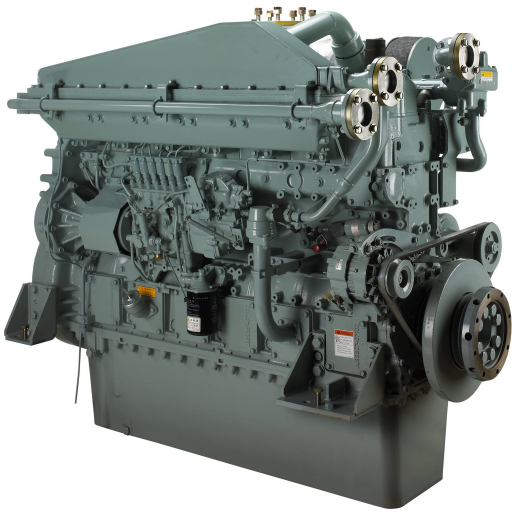

MITSUBISHI MARINE ENGINE

S6A3-T2MPTAW

450–490 kW | Marine Generator

IMO-T2 and IMO-T3 (SCR option)*

Reliable mechanical engine

ENGINE DATA			
Engine model	S6A3-T2MPTAW	**Method of operation**	6-cylinder, 4-stroke, water-cooled diesel engine, with direct-injection, turbocharger and air-cooler
Cylinder configuration	6 in-line		
Bore × stroke (mm)	150 x 175		
Total displacement (l)	18.56		
Compression ratio	14.5:1	**Cooling method**	separate high and low temperature cooling circuit; charge air cooler by closed freshwater system controlled by thermostat (intercooler)
Flywheel and housing	SAE 14 / SAE 10		
Dry weight (kg)	1900		
Aspiration	Turbocharged and after-cooled		

RATING [1,2]		
Application	Generator	
Duty Class	Prime	Prime
Output (kW)	450	490
Output (bhp)	603	657
Engine speed (rpm)	1500	1800
Emissions	IMO-T2 and IMO-T3 (SCR option)*	

1 For rating definitions, please see our website.

2 Atmospheric condition: barometric pressure: 100 kPa, ambient temperature: 298 K, relative humidity: 30%.

* The SCR after treatment can be provided through our partners. Please contact MTEE for more information.

© Mitsubishi Turbocharger and Engine Europe B.V.
This specification may be revised without prior notice.
All pictures shown are for illustration purpose only.
Version: 01-10-2026

MOVE THE WORLD FORWARD MITSUBISHI HEAVY INDUSTRIES GROUP

STANDARD EQUIPMENT

GOVERNOR (MANDATORY)
- Mechanical governor, RSUV type

FUEL SYSTEM
- Flexible fuel supply - and return hoses
- Fuel feed pump
- Fuel fine filters, change-over type
- Fuel injection pump
- Dual walled high-pressure fuel lines
- Fuel injectors

LUBRICATING OIL SYSTEM
- Wet type oil pan with inspection covers
- Oil pressure pump, gear driven
- Lubricating oil filters, change-over type
- By-pass filter
- Oil cooler with thermostat

STARTING AND ELECTRICAL SYSTEM
- Electric starter (Earth floated 24V)
- Alternator, 30 Amps.
- Stop solenoid (ETS)

COOLING SYSTEM
- Fresh water pump including piping and thermostat (HT)
- Front pulley PTO standard

AIR INLET SYSTEM
- Mitsubishi turbocharger
- Air inlet silencer with pre-cleaner
- Inlet air aftercooler or intercooler
- Inlet manifolds or ducts

OTHER
- Mounting brackets for rigid mounting
- Flywheel and housing, SAE standard
- Torsional vibration damper

OPTIONAL EQUIPMENT

SCR Aftertreatment
For more details, please see page 3

CERTIFICATION / CLASSIFICATION
- Available in cooperation with major classification societies.

EXHAUST SYSTEM
- Stainless steel insulation (SOLAS)
- Flexible expansion joint

DIMENSIONS

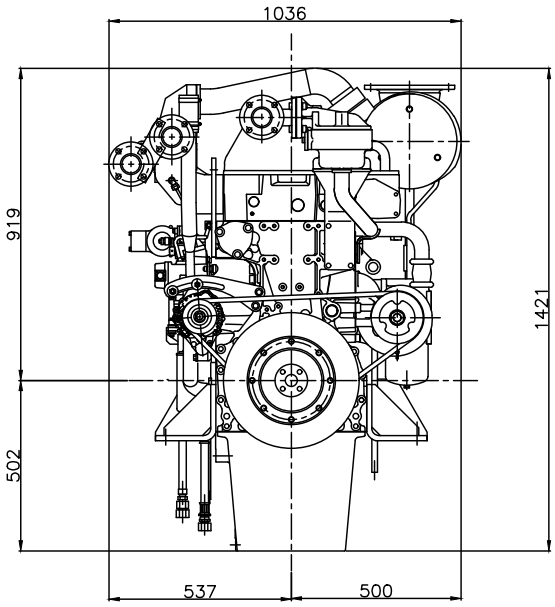

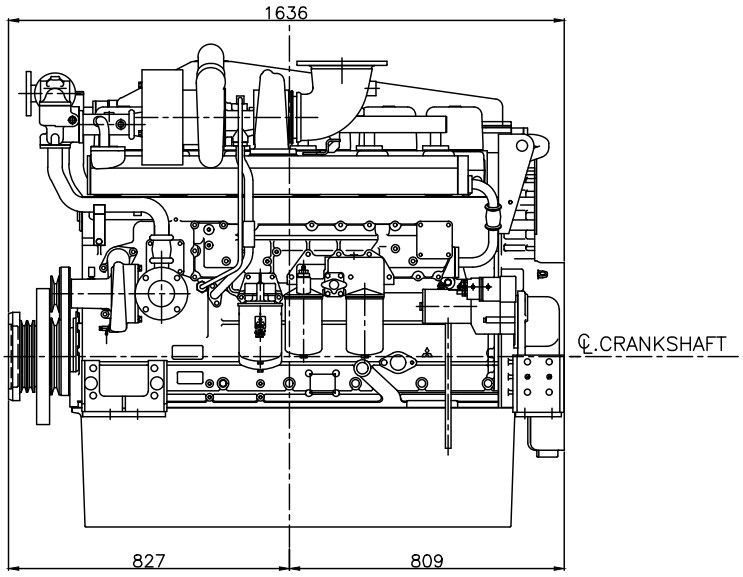

More information

Contact your local dealer for more information regarding Mitsubishi Marine Engines and optional equipment or, visit **www.mtee.eu**

© Mitsubishi Turbocharger and Engine Europe B.V.
This specification may be revised without prior notice.
All pictures shown are for illustration purpose only.
Version: 01-10-2026

MOVE THE WORLD FORWARD MITSUBISHI HEAVY INDUSTRIES GROUP

SCR AFTER TREATMENT SYSTEM

- SCR reactor
- Injection unit
- Dosing unit
- Shoot blower system
- Control system
- Urea pump unit

DIMENSIONS

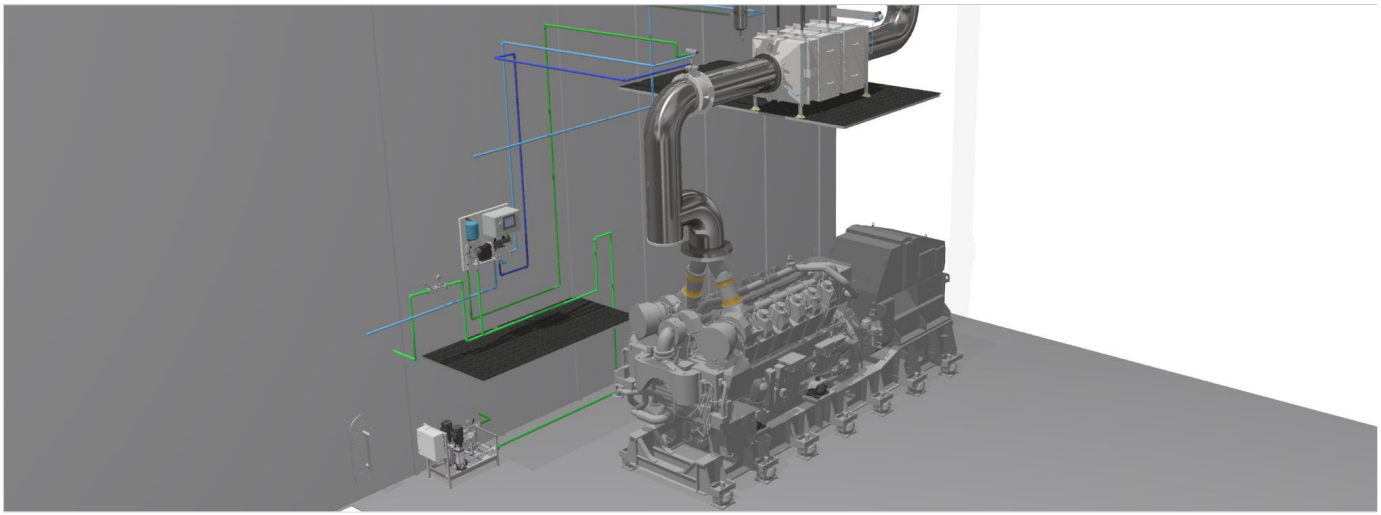

Dimensions

Engine L x W x H (mm)	1636 x 924 x 1421
SCR unit (On request) size (excl. insulation) L x W x H (mm)	On request
Mixing pipe requirements diameter (DN)*	On request
Mixing pipe length (mm)*	On request

* Insulation of the SCR system is not included in the scope of supply, to be supplied and installed by the shipyard.

More information

Contact your local dealer for more information regarding Mitsubishi Marine Engines and optional equipment or, visit **www.mtee.eu**

© Mitsubishi Turbocharger and Engine Europe B.V.
This specification may be revised without prior notice.
All pictures shown are for illustration purpose only.
Version: 01-10-2026